SHIELD+ 2

Performance Lighting





Long-lasting energy-efficient wall pack series. Fixtures consist of:

- Multi-step powder-coat painting process, optimized against UV rays and corrosion.
- Copper-free precision die-cast aluminum housing and mounting plate.
- Extra-clear, flat, tempered silk-screened soda-lime glass diffuser.
- Custom molded, anti-aging gasket(s).
- Stainless steel external hardware.
- High-efficiency COB, combined with an optimized passive cooling system, provides a long LED life.
- Specular vacuum metallized polycarbonate reflector provides full-cutoff, no glare design, and precision optical control.
- IESNA Type III light distribution.
- Input voltage: 120-277 V (50 / 60 Hz), integral 0-10 V dimming driver.
- Input voltage: 120-277 V (50 / 60 Hz), integral 1-10 V dimming driver (37 W / 53 W versions).
- Field settable integral bi-level lumen/wattage packages (37 W / 53 W) proprietary DIP switch driver for SHIELD+ 2 (stating factory setting at the lowest level).
- Optional, integral, emergency battery-pack designed for a minimum operation of 90 minutes (EMPK versions).
- Standard knock-out template for multiple junction box mounting options.
- Suitable for three surface mounted conduit entry points with 1/2" NPS plugs.
- BUTTON and SWIVEL 120-277 V (50 / 60 Hz) photoelectric switch options available (ordered separately).
- Consult factory for dimming options, custom finishes (please specify RAL color), and non-cataloged CCT (Kelvin) options.
- 5-year warranty.
- Marine Grade finish.
- Suitable for Natatorium applications.

IP 66 · WET · PRONTO · FULL CUT OFF · c UL us LISTED · 0-10 V · 1-10 V · 90' · RAL · IK 09 10 J

FINISHES

- **AN-96** / Iron gray / Textured
- **GR-94** / Aluminum metallic / Textured
- **RB-10** / Iron rust / Textured
- **WH-87** / White / Textured
- **BK-81** / Black / Textured

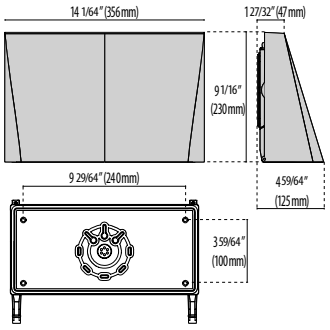

SHIELD+ 2

Lumen Output	27K	3K	35K	4K	5K
SHIELD+2 37W	3743	4064	4384	4705	5025
SHIELD+2 53W	5645	5787	5928	6070	6353
SHIELD+2 80W	7680	7782	7883	7985	8188

Note: Fixture has two LEDs and two Drivers. In EM Mode, One LED and Driver are Powered

Scan here for installation Instructions

Performance in Lighting reserves the rights to make all necessary changes without prior notice.

Performance in Lighting - 2621 Keys Pointe - Conyers, Georgia 30013 - USA - voice 770.822.2115 - info.usa@pil.lighting
www.performanceinlighting.com

Rev. 09/02/2026

Order Guide - Shield+ 2

Performance Lighting

Order code example	SH2-10W-3K-T2-AM-UNV-010V-FRST

Series	Wattage	CCT	Distribution	Finish	Voltage	Dimming	Options/ Accessories
SH2 Shield+ 2	**10W** 10 Watt (Min) **15W** 15 Watt **25W** 25 Watt **27W** 27 Watt **37W** 27.5 Watt **53W** 53 Watt (EMPK max) **80W** 80 watt max	80 CRI std. **27K** 2700K **3K** 3000K **35K** 3500K **4K** 4000K **5K** 5000K	**T2** Type 2 **T3** Type 3	**AM** Aluminum Metallic **IG** Iron Gray **IR** Iron Rust **WH** Textured White **BK** Textured Black **CC** Custom Color	**UNV** 120-277V	**010V** 0-10V Dimming Driver **ELV** 120V line-voltage dimming driver	**EMPK** Internal Battery Pack **CWEMPK** Cold weather integral battery pack -20° to 50° C 1502 lumen in EM mode **FRST** Frosted Glass **HI/LO** pp Based Occupancy sensor HI/LO **PHC-B** Photocell Button **OCC** App Based Occupancy sensor ON/OFF **REM** Remote battery backup **PHC-S** Swivel photocell **BOL** 40" Bollard

CONSULT FACTORY FOR OTHER AVAILABLE OPTIONS NOT SHOWN ABOVE

Performance in Lighting reserves the rights to make all necessary changes without prior notice.
Performance in Lighting - 2621 Keys Pointe - Conyers, Georgia 30013 - USA - voice 770.822.2115 - info.usa@pil.lighting
www.performanceinlighting.com
Rev. 09/02/2026

DESCRIPTION	FINISH	PART NUMBER
SHIELD+ 2		

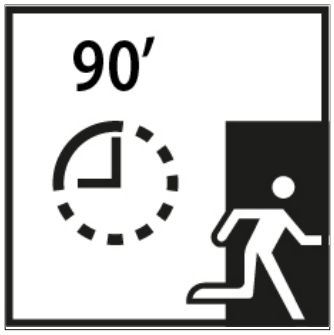

EMPK

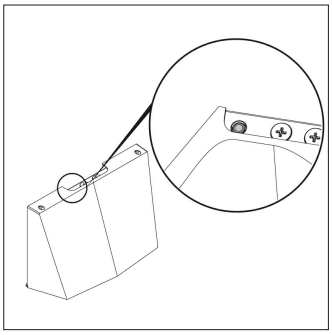

PHC-B

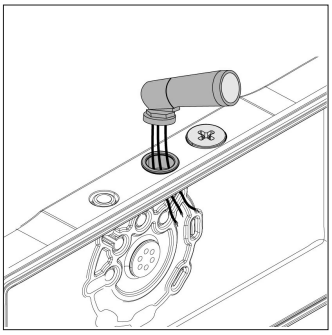

PHC-S



FRST

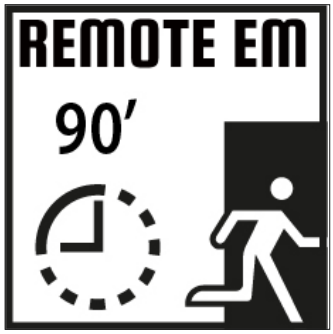

REM



OCC



HI/LO

Power Supply



17433
Kit driver 48V



17096
Kit driver 48V WP

RF Controls



3104173
RGBW RF controller 4 channel
(0.35A each CH)



31041730
RGBW RF controller WP 4 channel
(0.35A each CH)



310429
RGBW hand held remote

DMX Controls



17□973
RGBW DMX enabler/decoder 4
channel (0.35A each CH)



17□9730
RGBW DMX enabler/decoder WP 4
channel (0.35A each CH)